Contents

..... 1

..... 6

..... 8

..... 14

..... 18

..... 20

..... 23

AOISb

AOISb bSa O R O a

⚠ 2 5 3

⚠ E 7 5

⚠ 1 CB7

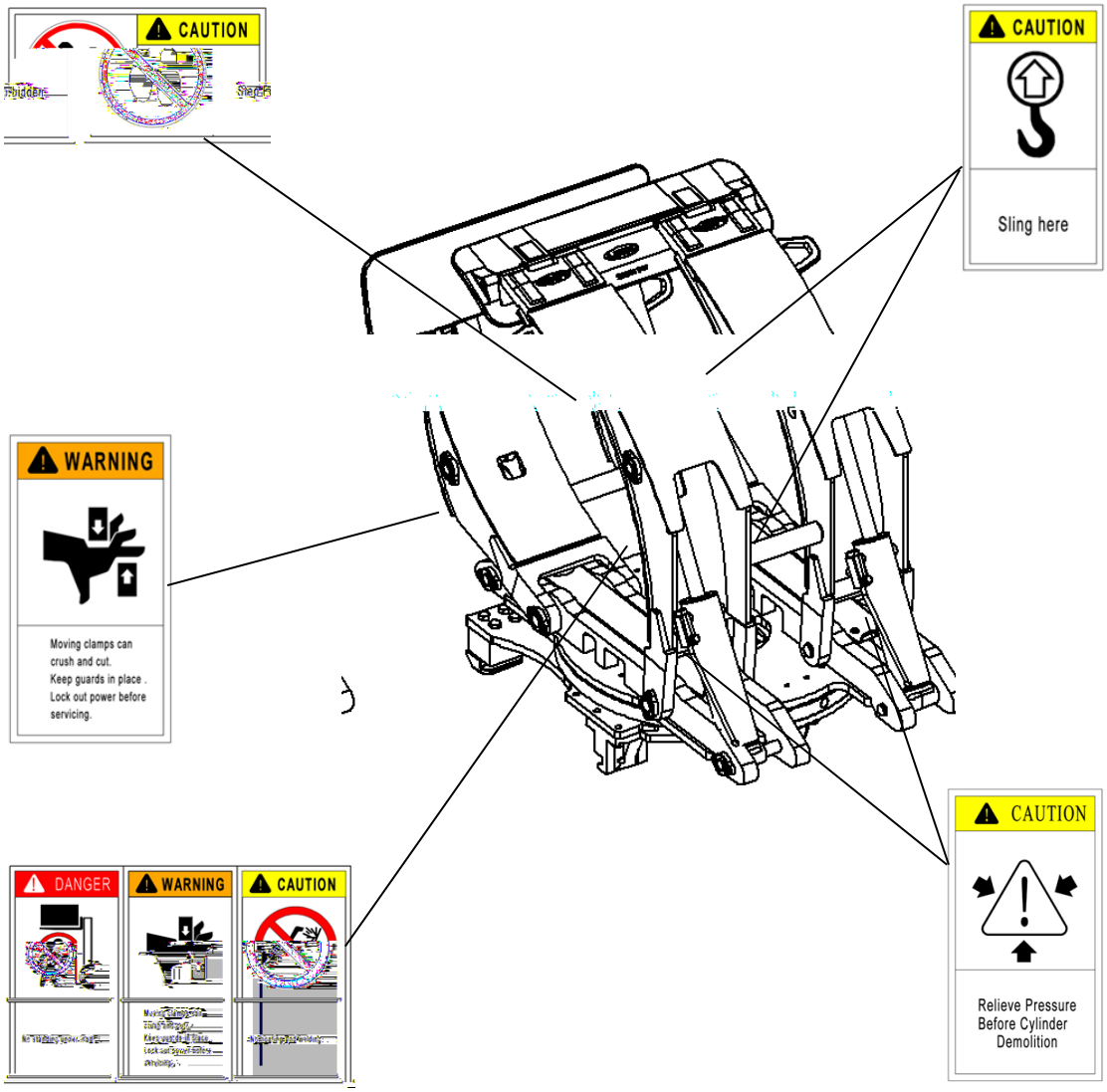

UO WObW O bSa

■

■

■

■

■

! S Ob a AOTSb bSa

WARNING!

■ T

■

■

⚠

■

■

⚠

0 b CbWU

"

!

!!

! "

■

■

" 5 S S O 6 O O R bSa

■

■

■

c bWU7 ab c bW a

OSR CR O O W

bc O O WU O O W

⚠

Model	Pressure value bar		Flow value L/min		
			Rotary motion		
	min	max	min	recommend	max
ZJ10R/11R/12R/13R/13H	140	160	19	26	38
ZJ22H/25H/27H/33H	140	160	19	38	57
ZJ38H/35R/42H/45R	140	160	38	57	76

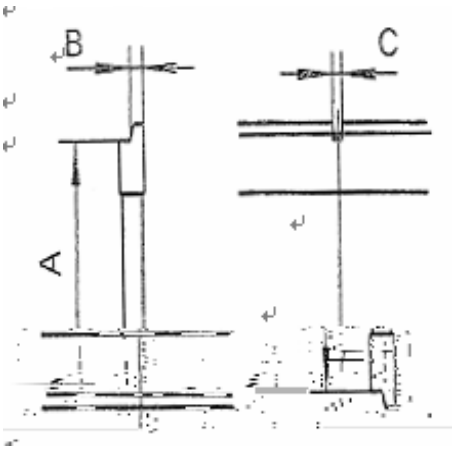

Figure 1

Installation level	A		B		C	
	min	max	min	max	min	max
	380	381	15	16	15.2	16.8
	474.5	476	20.5	21.5	18.2	19.8
	595.5	597	24.5	25.5	18.2	19.8

! 7 abO ObW Sb Ra

1、remove of the packaging, then lifting the truck attachments and place on the tray.

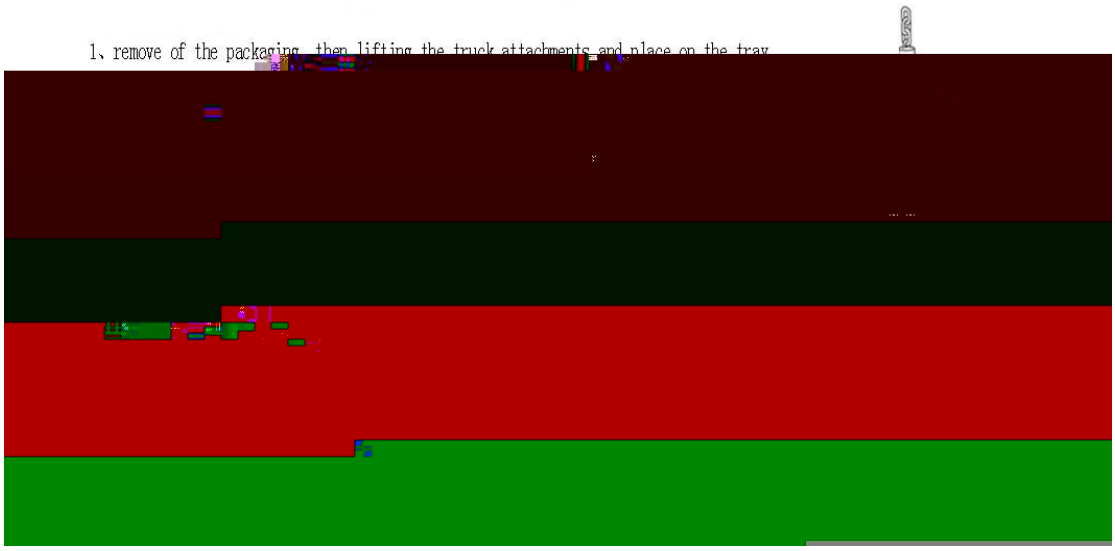

⚠

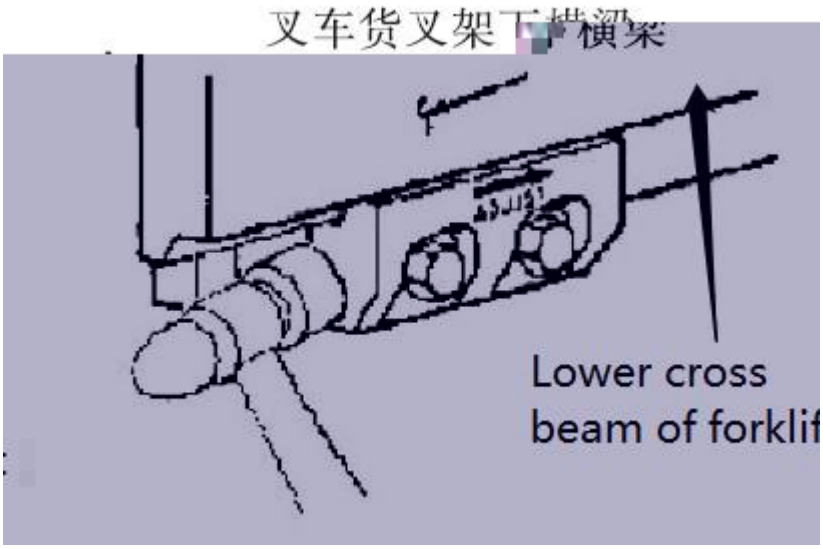
叉车货叉架下横梁
Lower cross
beam of forklif

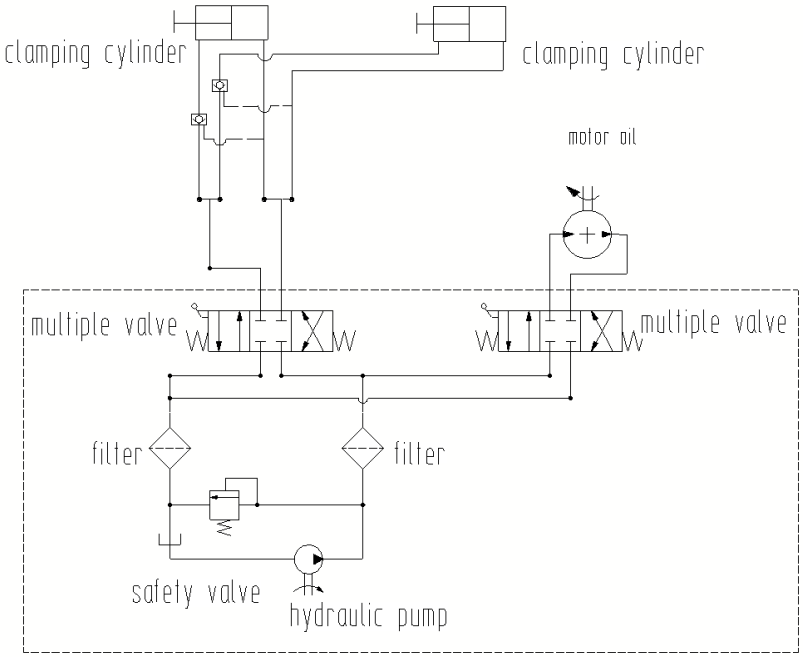
clamping cylinder
clamping cylinder
motor oil
multiple valve
multiple valve
filter
filter
safety valve
hydraulic pump

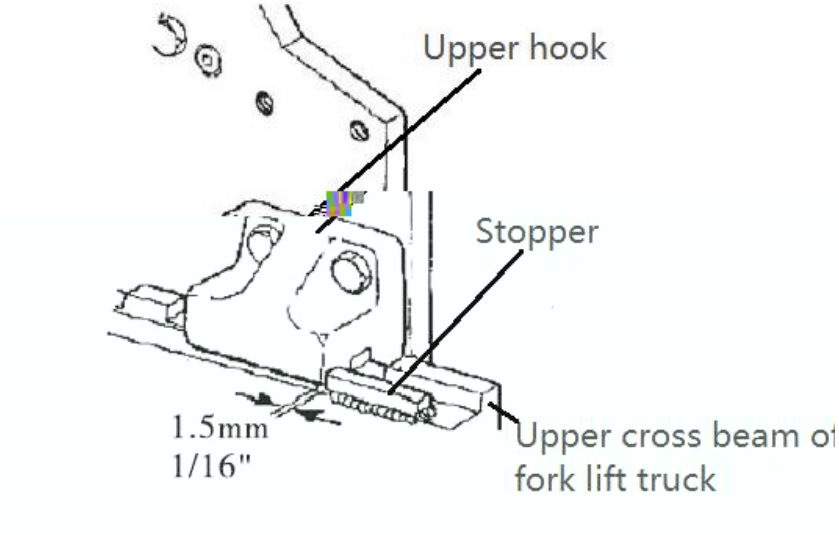

Upper hook Stopper Upper crossbeam of the forklift carriage

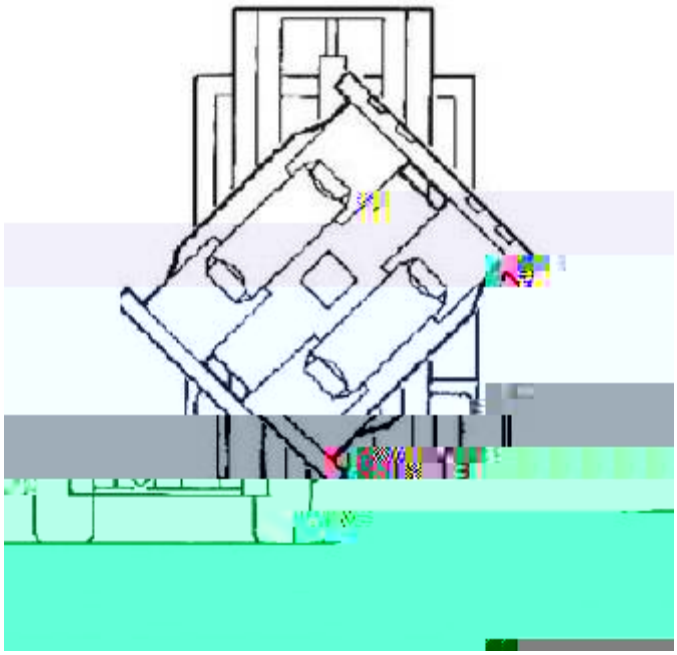

Turn to any point of 45° to adjust the short arm

⚠

" S ObWU7 ab c bW a

OWbS O S O R aS dObW

B c Sa bWU

A S WV AbCbS S b